FT08C-110

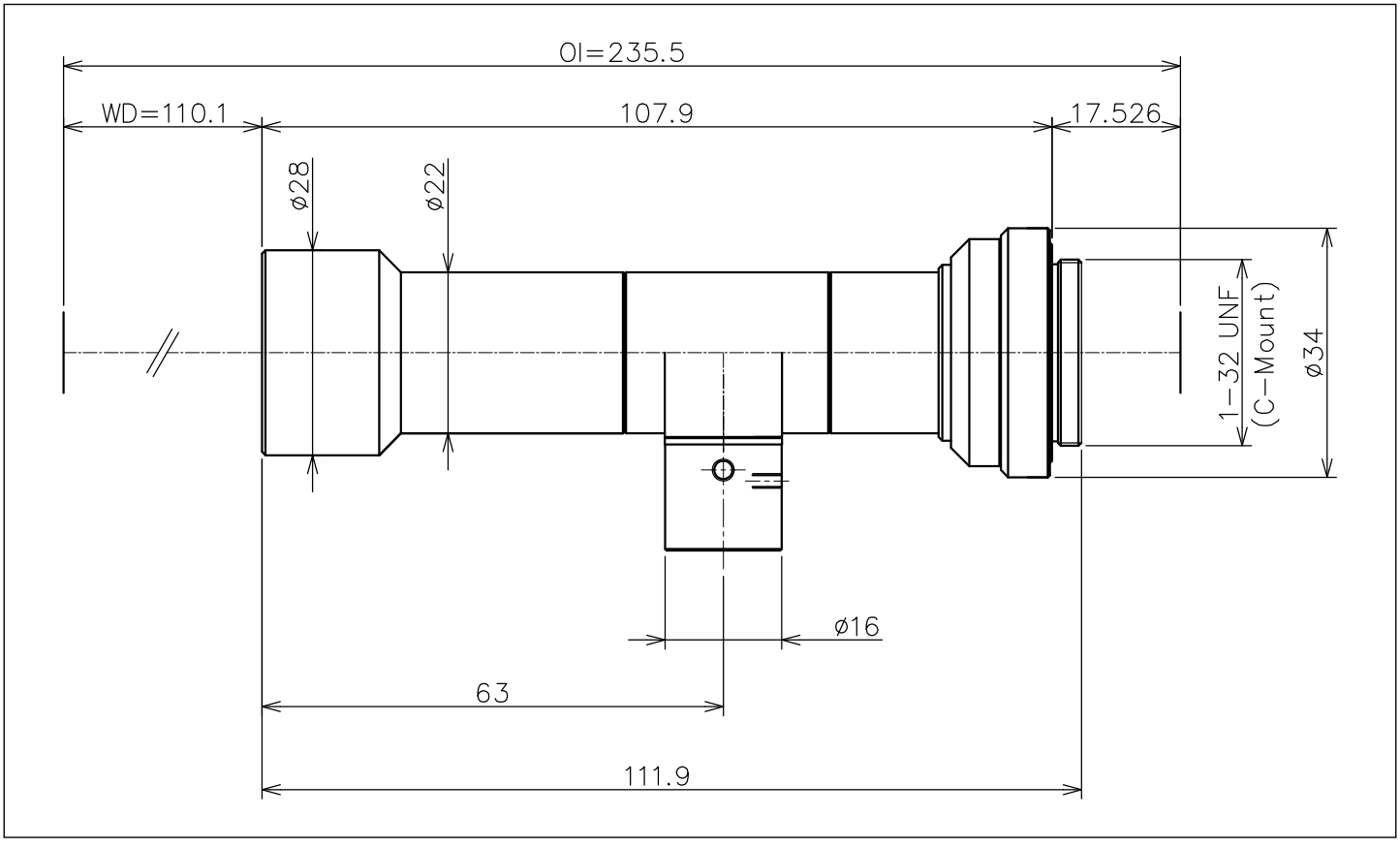

Model		FT08C-110
Application		Object side Telecentric Lens
Magnification		0.8x
W D		110.1mm
O I		235.5mm
F.NO		11.1
Object side NA		0.036
Resolution		9.3μ
Depth of field		1.4mm
TV Distortion	1/1.8"	0.00%
	2/3"	0.01%
Weight		—
Image size		1/2" 1/1.8" 2/3"
Mount		C Mount

○Specifications mentioned above are design values.
○Resolution indicates a theoretical resolution at a wavelength of 550nm.
○Depth of field is calculating using 1/2" camera (permissible circle of confusion 40μ).
○Specifications and dimensions are subject to change without notice.

MaxxVision®
Sigmaringer Str. 121
70567 Stuttgart
Tel.: 0711 997 996 3
www.maxxvision.com