TAMRON

NEW Ultra High Resolution

M112FM35

- Made for large imagers
- High Resolution Power
- Ultra Compact Body

P/N			M112FM35
Imager size			1/1.2”
Mount			C-Mount
Focal length			35 mm
Aperture			F/2.1 - F/16
Angle of View (horizontal x vertical)	1/1.2"	(4:3)	17.3° x 13.1°
		(16:9)	18.8° x 10.7°
	2/3"	(4:3)	14.3° x 10.7°
		(16:9)	15.5° x 8.8°
Focusing range			200mm - ∞ (recommended shooting distance 0,3m)
Operation	Focus		Manual w/lock
	Iris		Manual w/lock
Filter size			M27mm P=0.5mm
Back focus (in air)			17.53mm
Exit Pupil Position			-35.5mm
Distortion			0.05% (distance 0.5m)
Optical Overall Length			32.6mm
Maximum Diameter			29.0mm
Weight			57g
Operating Temperature			-20°C ~ 60°C

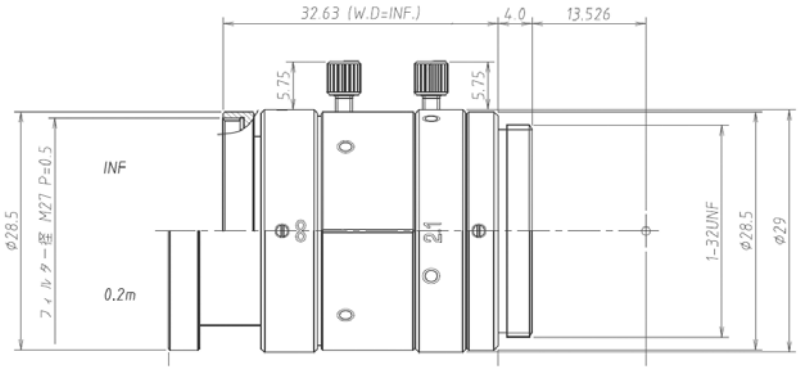

TAMRON Europe GmbH - Robert-Bosch-Str. 9 - 50679 Köln - Phone +49 (0) 221 / 970325-0
Fax +49 (0) 221 / 970325-4 - Email info@tamron.de

MaxxVision®
Sigmaringer Str. 121
70567 Stuttgart
Tel.: 0711 997 996 3
www.maxxvision.com