XLS02-E

μ·TRON

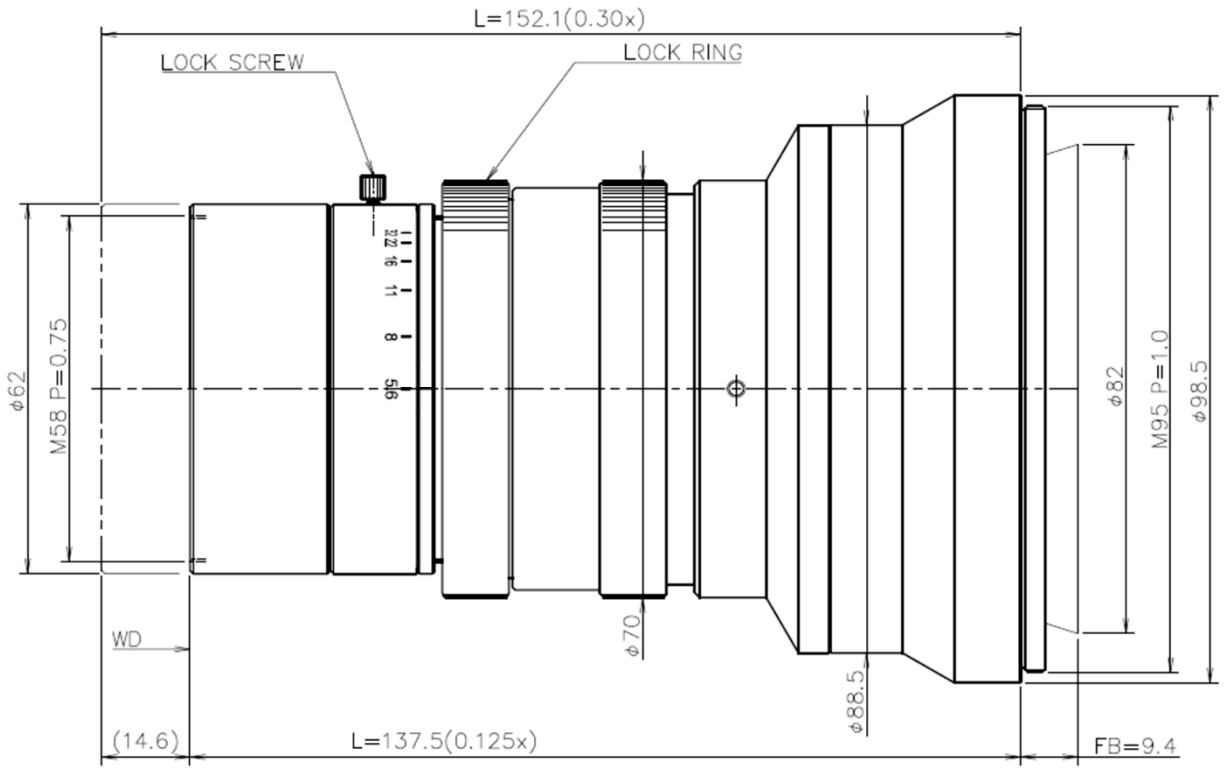

UNIT : mm

Model	XLS02-E		
Application	Line Scan Lens for Large Image Circle		
Magnification	0.125x	0.20x	0.30x
W D	705.0 mm	455.0 mm	315.0 mm
O I	851.9 mm	608.1 mm	476.5 mm
Overall Length	137.5 mm	143.7 mm	152.1 mm
FNo.(∞) / (Effective FNo.)	5.6 / (6.4)	5.6 / (6.8)	5.6 / (7.4)
Object Side NA	0.01	0.015	0.02
Optical Distortion	0.01%	-0.02%	-0.04%
Weight	680g		
Image circle	φ82mm		
Mount	M95 P=1.0 FB=9.4		
Filter Thread	M58 P=0.75		

◦Specifications mentioned above are design values.

◦Specifications and dimensions are subject to change without notice.

MaxxVision®
Sigmaringer Str. 121
70567 Stuttgart
Tel.: 0711 997 996 3
www.maxxvision.com