HS2514J

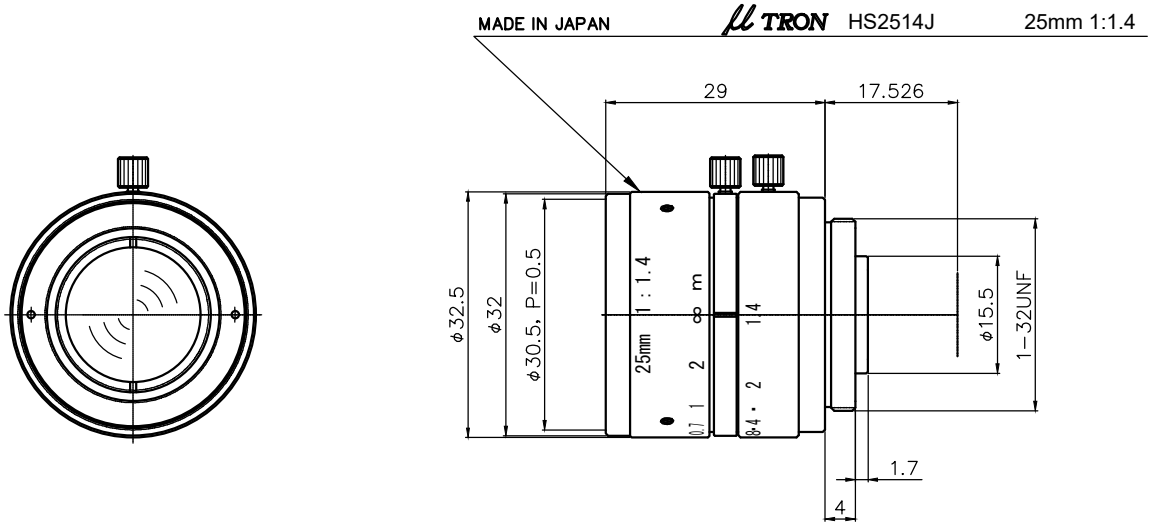

UNIT : mm

Model No.		HS2514J
Application		3 Mega Pixel Fixed Focal Lens
Focal Length		25mm
F No.		1.4
Angle of View (V×H)		19°×15°
Image Format		8.8mm×6.6mm (φ11mm)
Minimum Object Distance		0.3m
Mount		C-Mount
Flange Back		17.526mm
Filter Size		φ30.5mm P=0.5
Size		φ32.5mm×29mm
Weight		57.5g
TV Distortion	1/3	-0.02%
	1/2	-0.05%
	2/3	-0.12%

※Indicated specifications are design values.

MaxxVision®
Sigmaringer Str. 121
70567 Stuttgart
Tel.: 0711 997 996 3
www.maxxvision.com