computar

# H1328KP

**f = 1.3mm F2.8 Megapixel lens**
**for 1/2 type Format Board Cameras, Fisheye, No Iris**

1/2 inch

| | | | | | | | |
|---|---|---|---|---|---|---|---|
| Model No. | | H1328KP | | Effective Lens Aperture | Front | φ19.5mm | |
| Focal Length | | 1.3mm | | | Rear | φ7.0mm | |
| Max. Aperture Ratio | | 1:2.8 | | Distortion | | -99.4% (y=2.3) | |
| Image Size at 180° | | φ4.6 | | Back Focal Length | | 4.17mm | |
| Operation Range | Iris | — | | Flange Back Length | | — | |
| | Focus | 0.05m - Inf. | | Mount | | M12 P=0.5mm | |
| Object Dimention at M.O.D. | 1/2 type | - | | Dimensions | | φ23.5mm x 29.31mm | |
| | 1/3 type | - | | Weight | | 17.1g | |
| Coating | | MgF2 Single Coat (All Surfaces λ = 510nm) | | | | | |
| Angle of View | D | 1/2 type Fisheye | - | 1/3 type | - | 1/4 type | 177.3° |
| | H | | - | | 180.0° | | 151.0° |
| | V | | 180.0° | | 151.0° | | 117.6° |

M12 P=0.5

## Dimensions

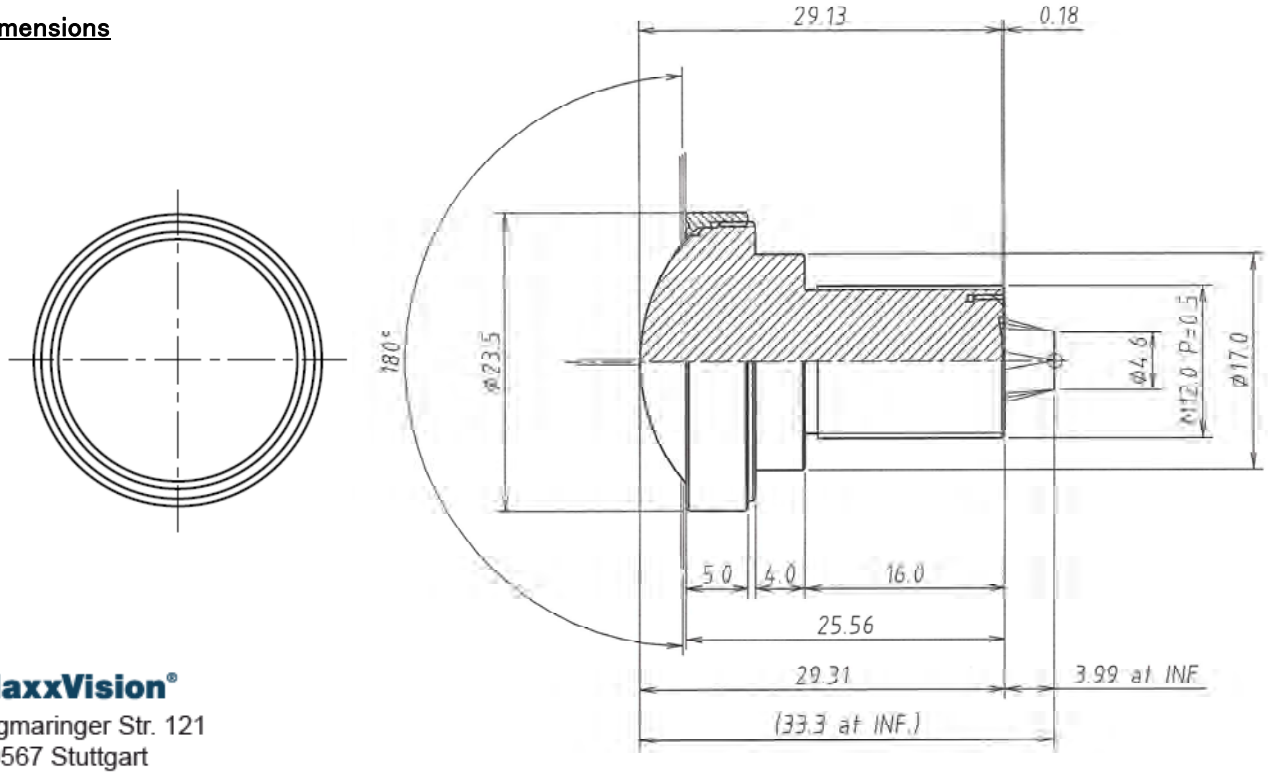



**MaxxVision®**
Sigmaringer Str. 121
70567 Stuttgart
Tel.: 0711 997 996 3
www.maxxvision.com


ImmerVision Enables Compatible.

Specification is subject to change without any notice. 01/07/2014