computar

V1228-MPY

f=12mm F2.8
for 1.1″ type Cameras 12 Megapixel
C-Mount

Model No.		V1228-MPY		Effective Lens Aperture	Front	φ26.2mm	
Focal Length		12mm			Rear	φ16.7mm	
Max. Aperture Ratio		1:2.8		Distortion	1.1 type	−0.5%	
Max. Image Format		14.2mm x 10.4mm(φ17.6mm)			1 type	−1.0%	
Operation Range	Iris	F2.8 - F16.0			2/3 type	−1.4%	
	Focus	0.3m - Inf.		Back Focal Length		8.4mm	
Control	Iris	Manual		Flange Back Length		17.526mm	
	Focus	Manual		Mount		C-Mount	
Object Dimension at M.O.D.	1.1″ Type	35cm x 26cm		Filter Size		M40.5 P=0.5mm	
	1″ Type	32cm x 24cm		Dimensions		φ42.0mm x 36.1mm	
	2/3″ Type	22cm x 16cm		Weight		98.3g	
Angle of View	D	1.1 Type	71.1°	1 Type	66.4°	2/3 Type	48.6°
	H		60.5°		55.5°		39.6°
	V		46.2°		42.9°		30.1°
Operating Temperature		−10℃ - +50℃					

M.O.D. : Minimum Object Distance

Dimensions

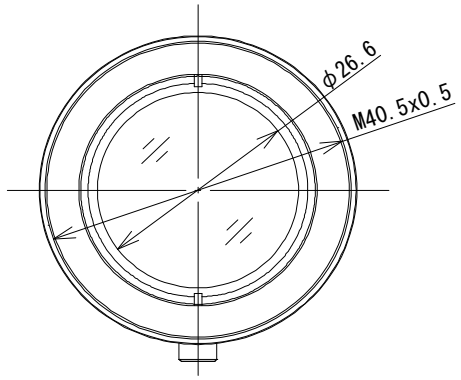

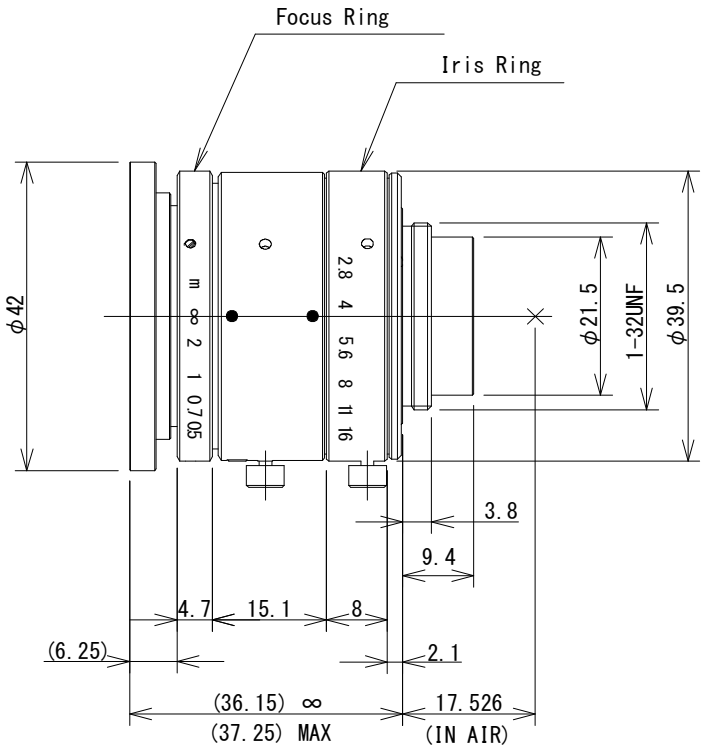

Distributed by:

MaxxVision®

Sigmaringer Str. 121
70567 Stuttgart
Tel.: +49 711 997 996 3
Fax: +49 711 997 996 50
www.maxxvision.com
info@maxxvision.com