SPACECOM CCTV LENSES

JF16M-2

Image Size: 2/3

[SPECIFICATIONS]

Focal Length :	16mm	Flange Back :	17.526mm
Maximum Relative Aperture :	1:1.4	Operation :	Focus : Manual Iris : Manual
Iris :	F1.4 - Close	Operation Temperature :	-10 to +50
Angular Field of View :	30.7 X23.3 deg.	Mount :	C-Mount
Image Format :	8.8X6.6mm(D11mm)	Front Thread :	27mm P0.5
Minimum Object Distance :	0.4m(From Front Vertex)	Size, Weight :	D29.3X30mm, Approx. 90g
Object Dimensions at M.O.D. :	22.7X17.0cm		
Optical Back Focal Distance :	14.20mm(In Air)		

[COMPOSITION]

Lens 1
Lens Cap 1
Dust Cap 1

[DIMENSIONS]

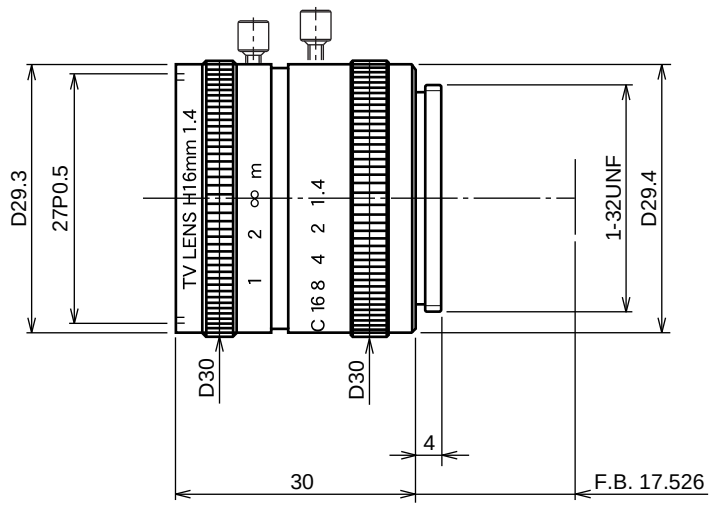

Unit:mm

MaxxVision®
Sigmaringer Str. 121
70567 Stuttgart
Tel.: 0711 997 996 3
www.maxxvision.com

SUBJECT TO CHANGE WITHOUT NOTICE.